The Risk of LOPA and SIL Classification in the process industry

Mary Kay O'Connor Process Safety Center
International Symposium

Beyond Regulatory Compliance, Making Safety Second Nature

October 28-29, 2008

Chris Pietersen
Safety Solutions Consultants BV
pietersen@safety-sc.com

Chris Pietersen

Director SSC (before : TNO SSC)

> TU Delft, Shell (Process Control)

> 25 year in safety, TNO senior Research Fellow

> Accident investigation (e.g. Bhopal, Mexico LPG)

> Member Dutch Advisory Council for Hazardous Material

> Leader Module 'Industrial Safety' of official Dutch Safety Education Program

>SSC: Life Cycle Process Safety: Consultant for the Process Industry.

Process Safety Philosophy

- Technical:
  HAZOP, SIL, LOPA, QRA
- Organisational
  Safety Management,
  Learning from incidents
- Culture
  Safety Culture Assessment (SCM)
  Behaviour

International SIL Standards:

IEC 61508/ 61511: ***Risk Based Approach***

*-Evaluate the **Risk** of a (HAZOP derived) scenario*
*- Determine the required **Risk** reduction magnitude*
*- Design or Verify the **Risk** Control Measure*
- Implement in Safety Management System

Potential Pitfalls (1)

- The quality of the HAZOP study
  - Team composition/ experience
  - As built drawings
  - Project budget/ planning
  - Inherent Safety
  - Credibility, information of LOC scenario's for SIL/ LOPA

- The risk analysis capability of the team
  - Consequence / frequency assessment
  - (In) dependencies in causes and control measures

Potential Pitfalls (2)

- The SIL verification:
  - Functionality check
  - (In) dependencies
  - PFD calculations
- Safety management of SIL
  - Plan, Do, Check, Act approach
  - Procedures and Workinstruction

The need for a SIS

The risk of overfilling a vessel

Examples from disasters

- *Buncefield explosion (UK): Overfilling of storage tank (December 2005)*
- *Texas City disaster: Overfilling of distillation tower (March 2005)*
- *Mexico City LPG Disaster : Overfilling a storage sphere (November 1984)*

Overfilling Tank 912
Buncefield Depot 11 December 2005

- Filling (from pipeline) with ‘motorfuel’ (550- 890 m3/hr)
- Start filling tank: 19.00 hr, overfilling/release: 5.20 hr
- Explosion: 06.01 hr

- **Automatic Overfill protection system failed (levelswitch): IEC 61511: Reliability of (overfill) protection system**
- **Main Problem: Safety Management, no risk based approach.**

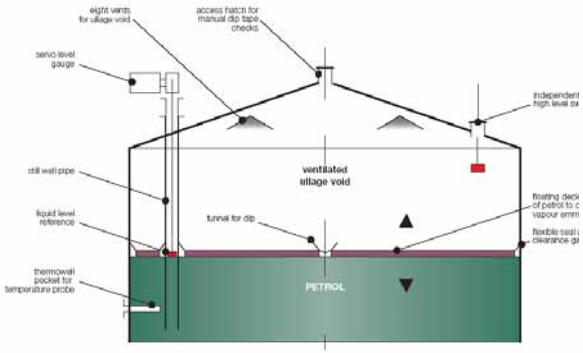

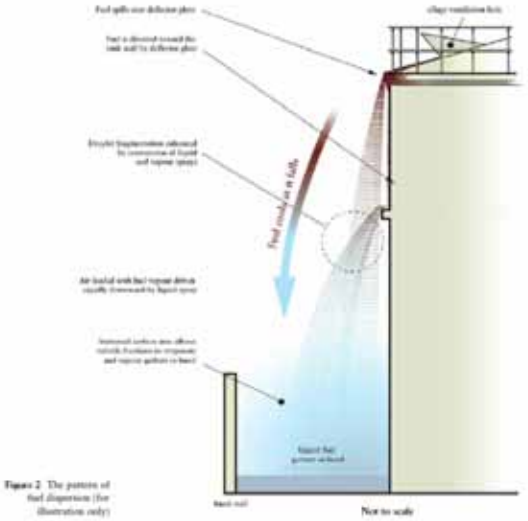

Explosion Texas Refinery, 23 March 2005

- **Continued overfilling** of the raffinate splitter in the isomerisation during start-up (closed outlet)

- Opening Relief valves to Blowdown drum and Loss of Containment (200 m3) via ventstack at 36 meter height.

- Explosion and fire, temporary trailers: 15 fatalities/ >170 injured persons

Texas disaster aspects

- Inherent Safety: vent to non-safe location
  - Proposed modification not implemented.
  - Post disaster reaction industry: SIL protection overfilling!
    - IEC 61508: always consider inherent safety first
    - Effort to be put at safe design/ controlled system; remaining risk: SIL
- HAZOP start-up not performed
  - Common practice in industry: only continuous process
  - IEC 61508: A systematic Hazard Identification for all Life Cycle phases is required before the SIL approach is applied.

Inherent Safety Example

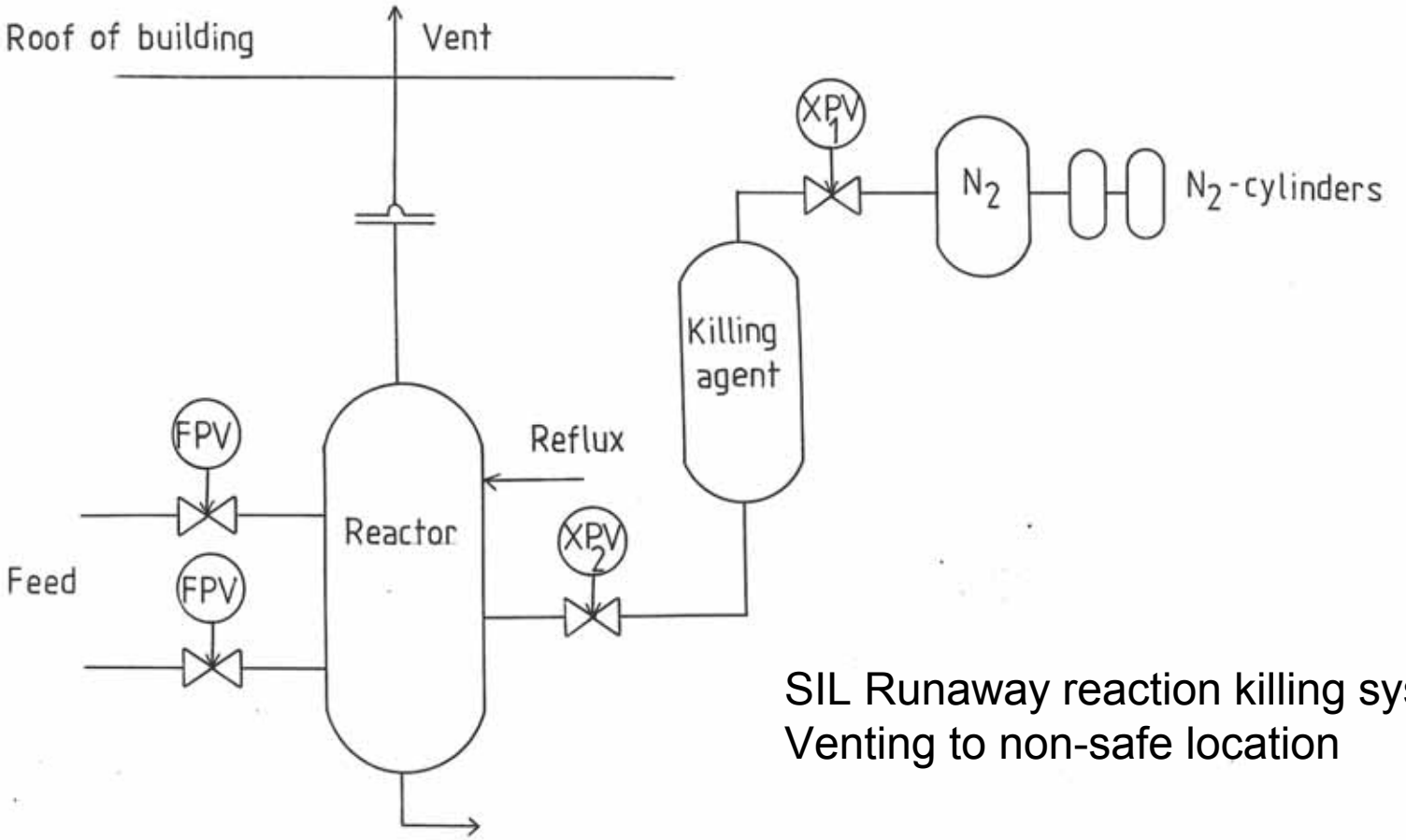

SIL Runaway reaction killing system
Venting to non-safe location

Texas disaster aspects (2)

- Level instrumentation bottom splitter (Texas)

  –Level transmitter voor Level Control (**not functional**).
  –Level indication (control room) via transmitter: **failed**
  –High Level Alarm (72%, 2,3 m) : **normal functioning**
  –Separate, redundant, hardwired high level alarm
  –Level Sight Glass: **not functional** (dark residue)
  –**No automatic overfill protection**

  –IEC 61511 SIL Approach: SIS required
  –Operator dependence (alarms, sight glass)
  –Maintenance of safety critical equipment

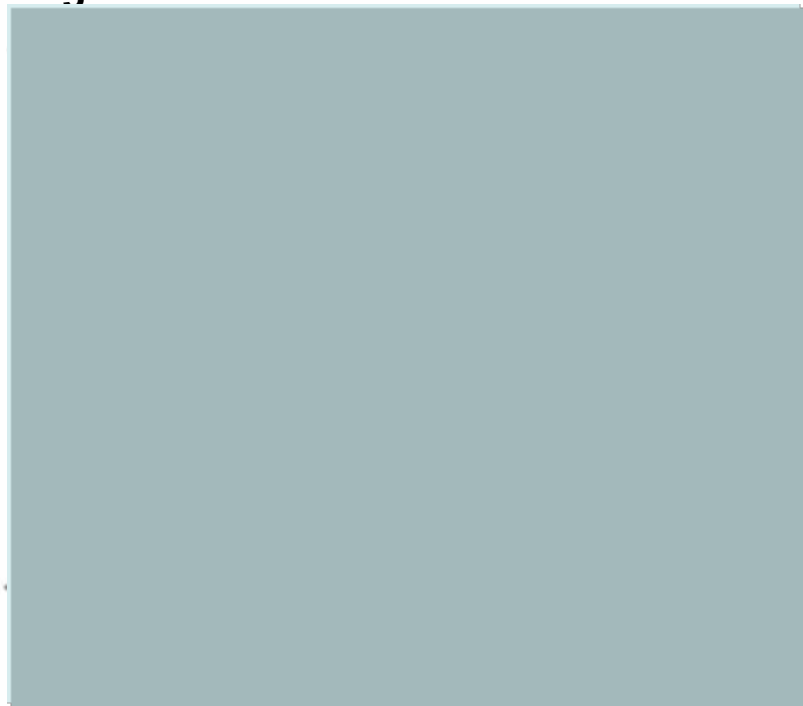

Mexico City LPG depot 19 November 1984
Overfilling storage sphere

Consequences of overfilling

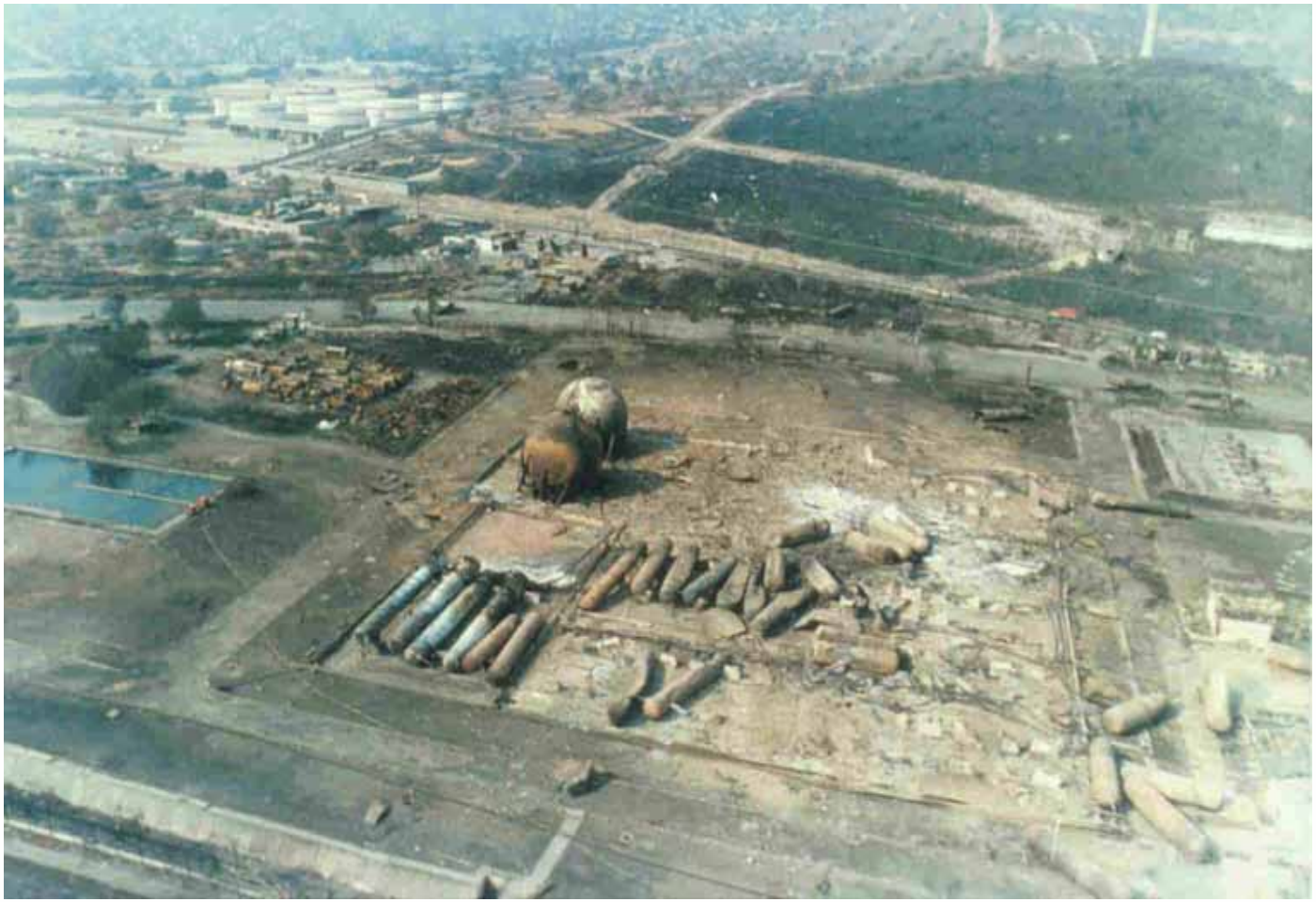

500 people killed

BLEVE phenomenum

- No HAZOP
- No MOC
- No Overfill protection

IEC 61508/ 61511 SIL approach

- Perform a systematic hazard identification study
  - HAZOP study
- Evaluate the risks of the identified hazards :
  - Risk matrix, Risk Graph, LOPA
- Determine the need for risk reduction :
  - Compare with acceptable Risk level
- Determine the required SIL of the SIS
- Verify the SIL for the SIS

Overfill Example

HAZOP: overfilling can lead to an explosion: 1 fatality

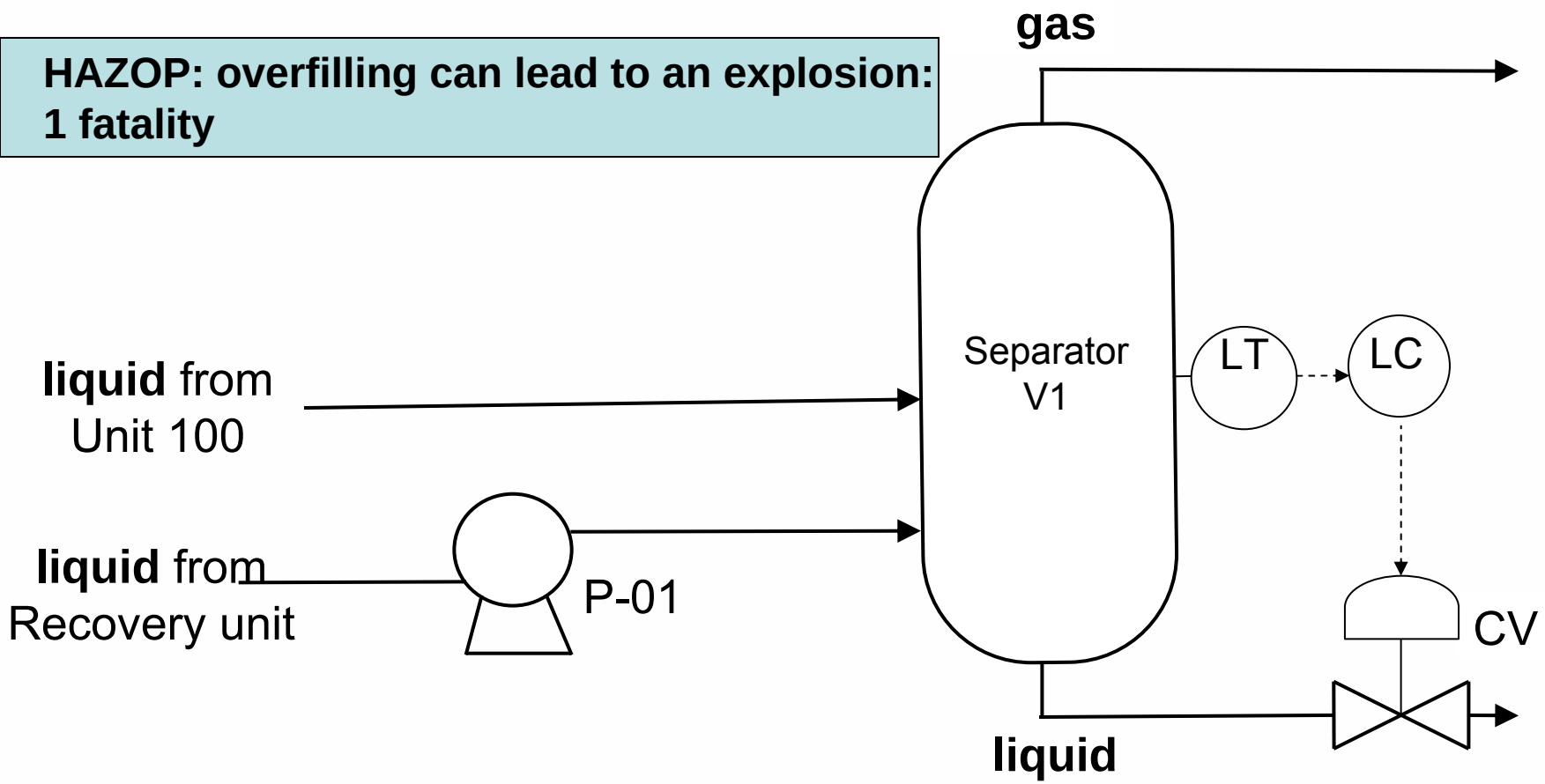

- Team requirements
- Company Risk Policy

Risk reduction for overfill scenario: Result SIL 1

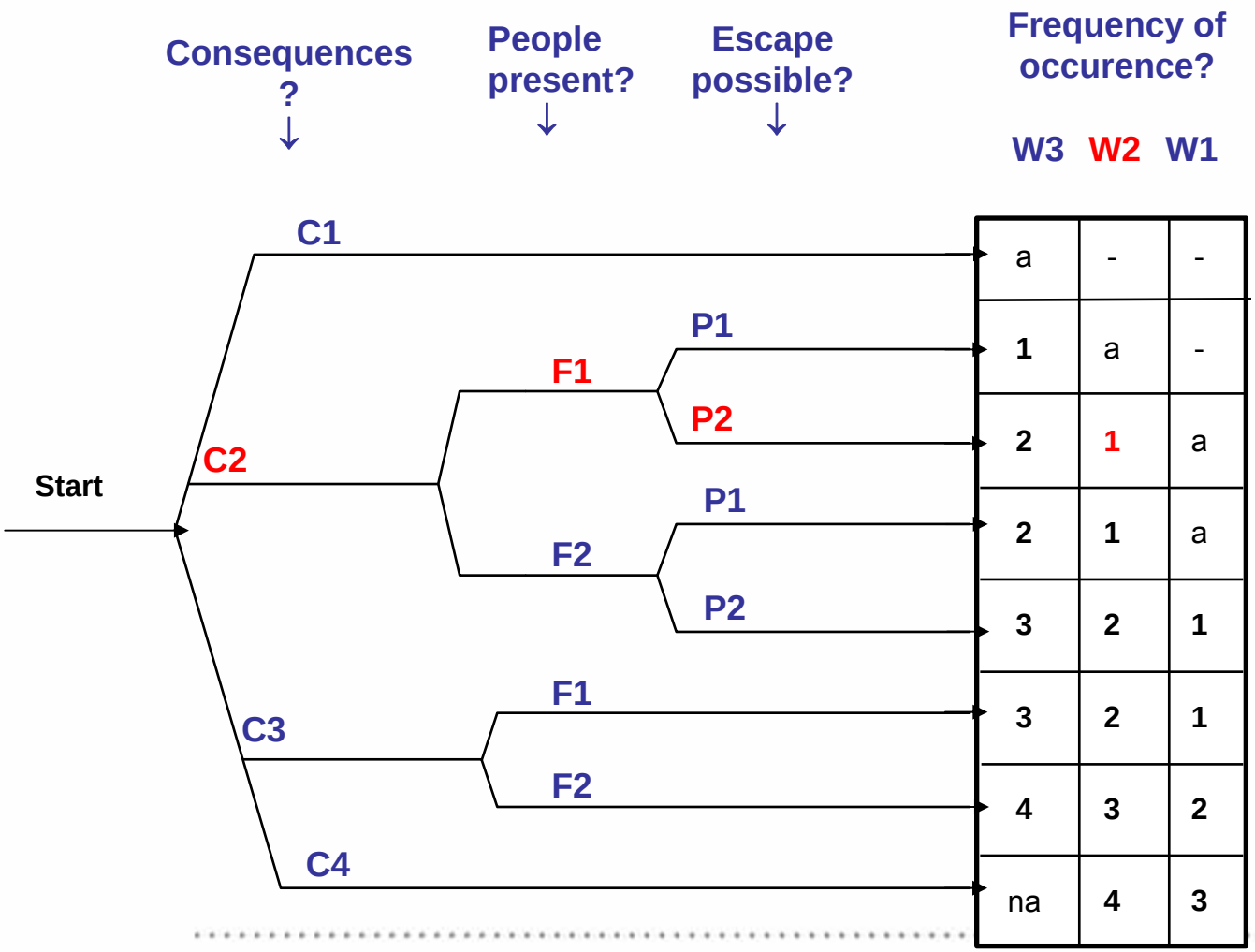

Proposed Overfill protection system

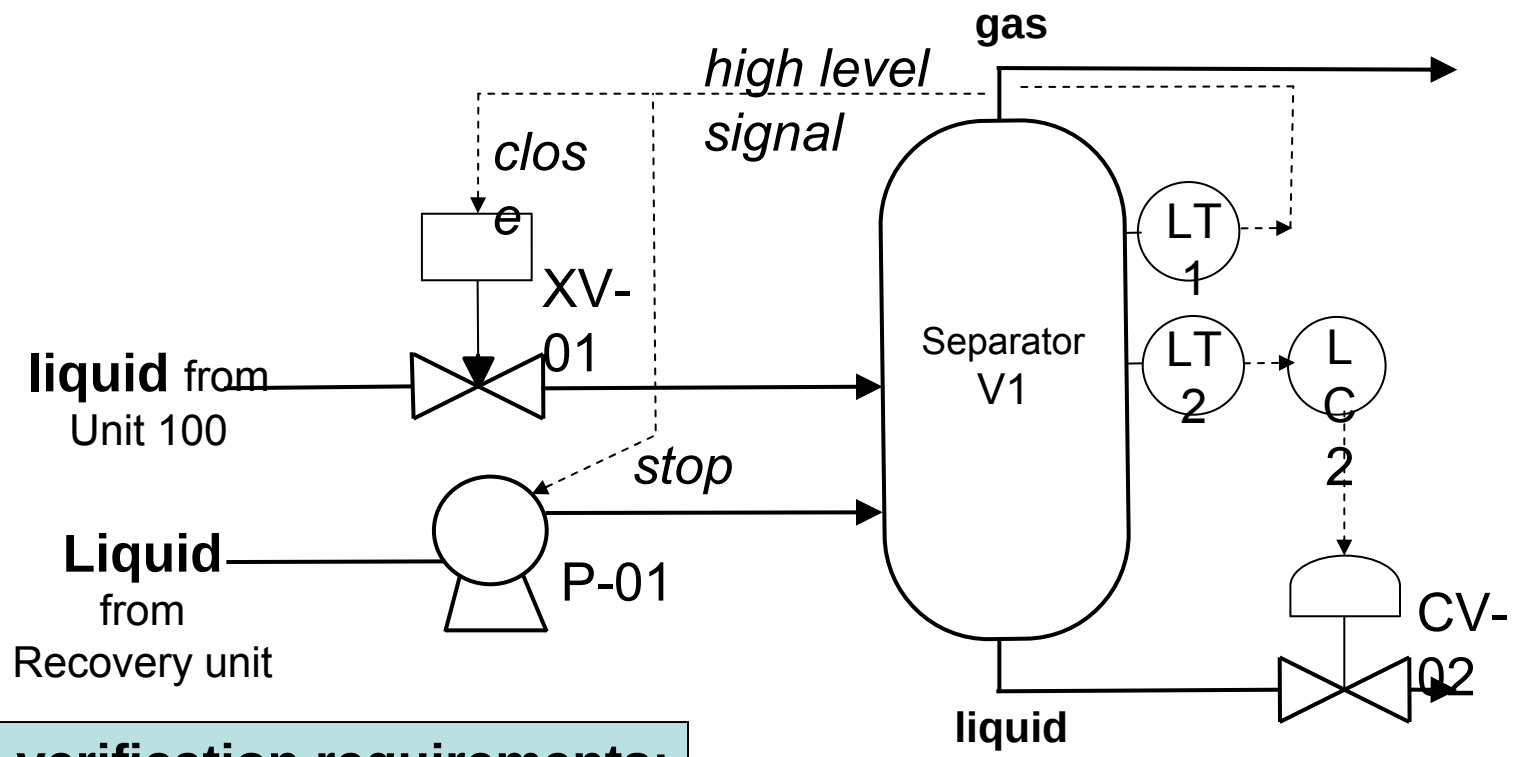

4 verification requirements:

- *Functionality*
- *Independence of Control*
- *Architectural constraints*
- *Probabilistic requirement*

Often limited to Probabilistic requirement

Failure frequency verification for SIL 1: PFD < 10^{-1}
(PFD=Probability of Failure on Demand)

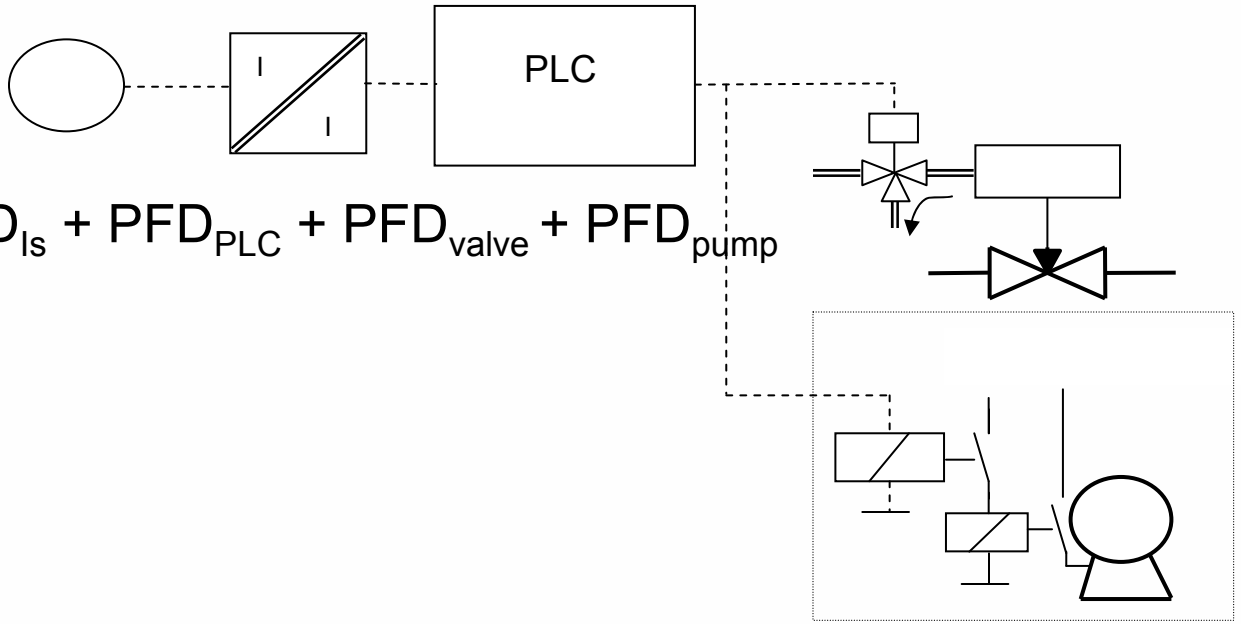

$PFD_{SIS} = PFD_{Sens} + PFD_{Is} + PFD_{PLC} + PFD_{valve} + PFD_{pump}$

$PFD \approx \frac{1}{2} \lambda_{DU} \cdot T$

λ = failure frequency/ hr

T= Proof test interval

PFD calculation

Level transmitter	$\lambda_{DU} = 6{,}0 \cdot 10^{-7}$ / h	Source: Sintef
Isolator	$\lambda_{DU} = 1{,}5 \cdot 10^{-7}$ / h	Source: Exida
MCC relais	$\lambda_{DU} = 2{,}0 \cdot 10^{-7}$ / h	Source: Sintef
Solenoid valve	$\lambda_{DU} = 9{,}0 \cdot 10^{-7}$ / h	Source: Sintef
Valve+ actuator	$\lambda_{DU} = 2{,}1 \cdot 10^{-6}$ / h	Source: Exida
PLC	$PFD = 5{,}0 \cdot 10^{-3}$	Source: TÜV
Prooftest interval T	4 year	

Result: $PFD_{SIS} = 7{,}8 \cdot 10^{-2}$

PFD < 10-1; Conclusion: SIL 1 probabilistic requirement fulfilled.

Remarks:

- **Only one of the four verification requirements**
- **Only if failure rate field data are collected over the lifecycle**
- **Often narrowed to ‘calculations’**

The Hitchhiker's Guide to the Galaxy (Douglas Adams)

- Calculate The Ultimate Answer to The Great Question of Life, the Universe, and Everything.
- Answer after seven and a half million years' work :

- Computer: answer is correct : may be you never actually know what the question is!

Failure level control LC-1: Failure (LOC) V7

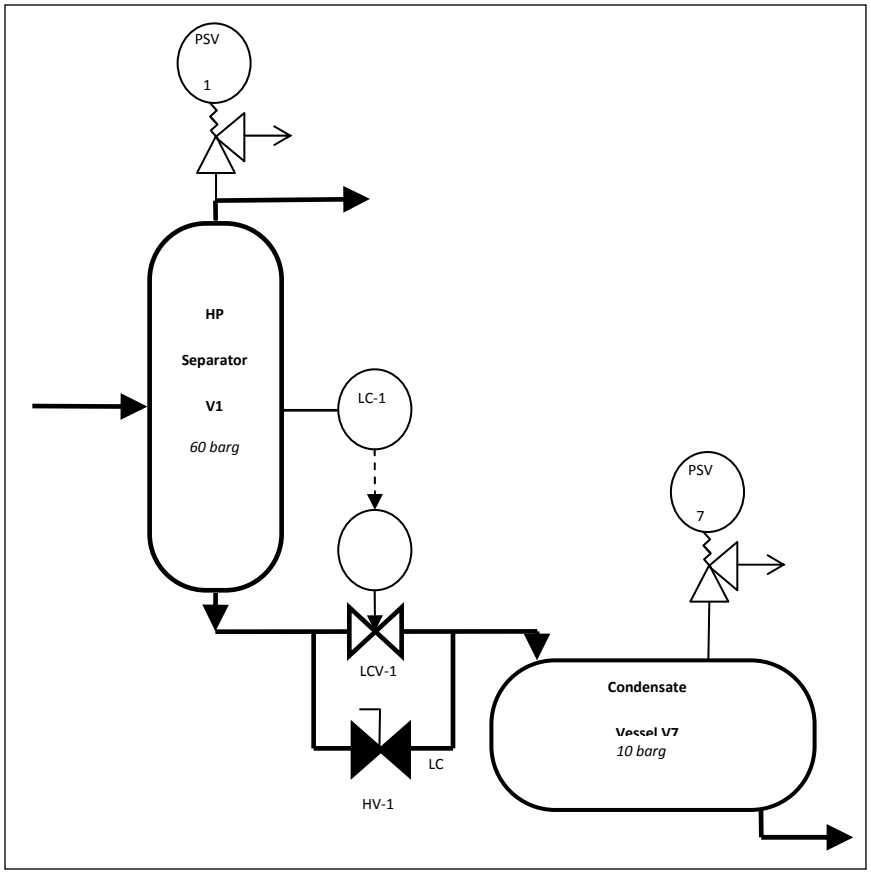

- Design pressure V7: 10 bar
- Pressure V7 on loss of level V1: 60 bar

Causes:
- IC1: Failure of leveltransmitter
- IC2: Opening of manual valve HV-1

•Possible Protection Layers, IPL's):
  - Relief valve at V7: PSV-7
  - Low level alarm of LC-1
  - Operator training/ procedure: action after alarm

LOPA results

Is operator an IPL?

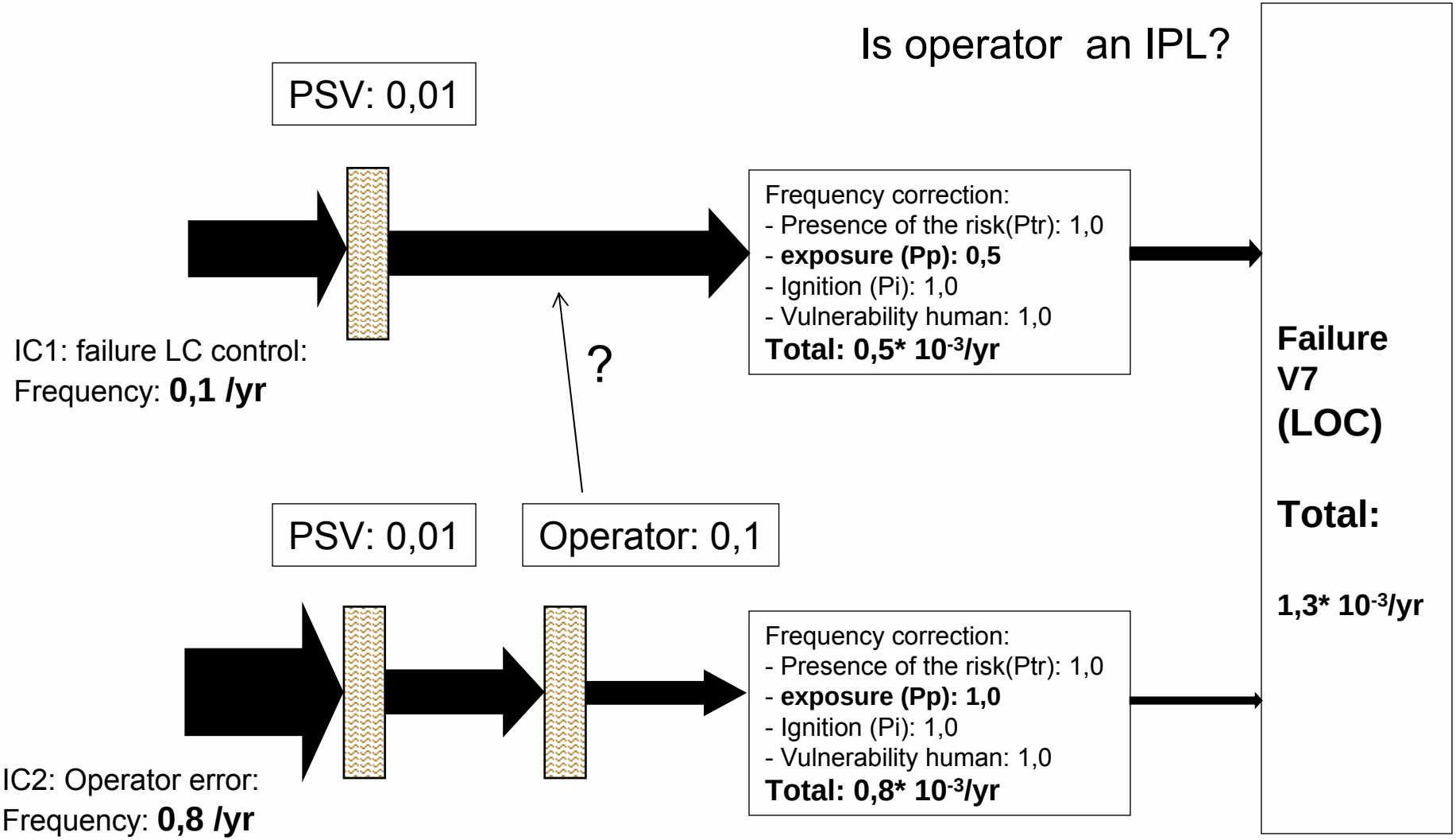

Determining SIL with LOPA

- LOC frequency: 1,3 * 10^{-3} /yr
- Consequences: 5 fatalities
- Acceptation criterium: 10^{-6} /yr

Required PFD of a SIS:

PFD_{SIS}= 10^{-6}/ 1,3 * 10^{-3}= 0,8* 10^{-3}

(PFD_{SIS}= 10^{-6}/ 0,85 * 10^{-3}= 1,2* 10^{-3} with operator IPL)

Result: PFD < 10^{-3} **SIL 3**

(Result: PFD < 10^{-2} **SIL 2 with operator IPL)**

Operator should generally not be seen as an IPL!

Before and after

Furnace

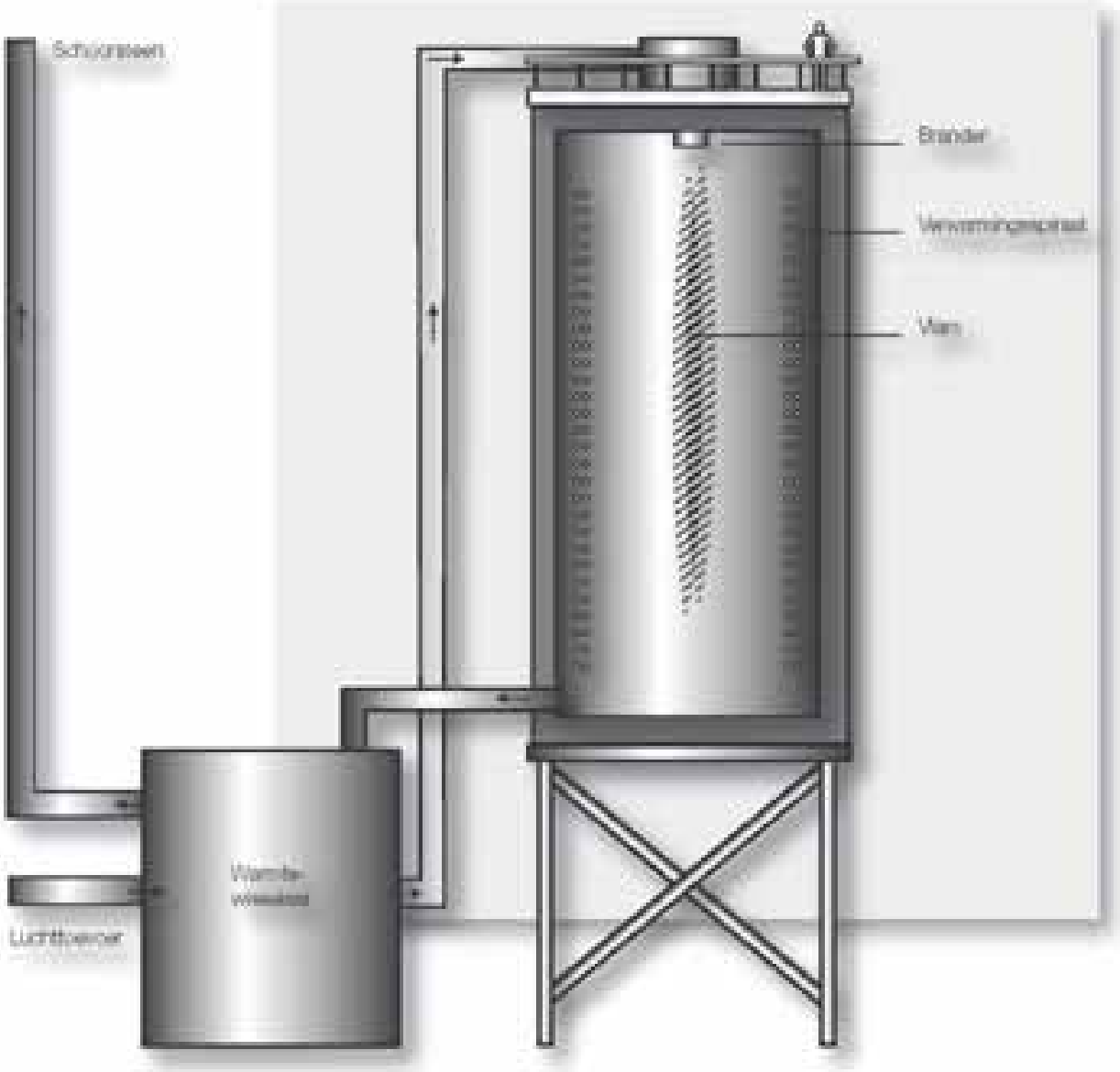

Explosion in furnace, 2003

- 3 people died
- HAZOP/ SIL Classification/ -verification: OK
- The Safety System was wrongly still in override during the start up of the furnace.

SIL standard not fully implemented:

Plan, Do, Check, Act in Safety Management System was lacking.

Summary/ Conclusions

- The SIL concept (including the use of LOPA) is often narrowed down to SIL Classification and PFD calculations.
- It is a danger that the SIL/ LOPA approach becomes the objective in itself, instead of a means to reach high safety levels.
- **The following main problem areas haven been considered:**
  - **The tendency to go for safety systems instead of more inherent safety**
  - **The quality of the HAZOP/ SIL/ LOPA team**
  - **The unjustified over dependency of operators in safety systems**
  - **The too large emphasis on PFD calculations, losing the real meaning behind it.**
  - **The lack of implementation of HAZOP/ SIL/ LOPA in the companies Safety Management System.**

Overall:

The risk exists that our safety standards and risk analysis methods are becoming counterproductive. The effectiveness for safety should be be monitored continuously.